THE UPSTATE ROCKETEER

The Official Newsletter of MARS
NAR Section #136

Volume 3, No. 4 **Published by the Monroe Astronautical Rocket Society** **August, 1990**

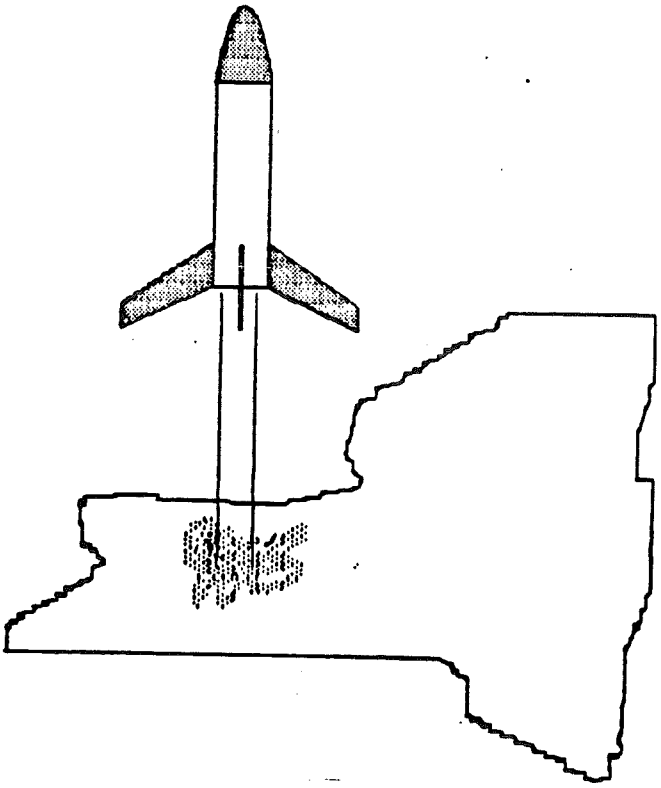

In This Issue

The *Upstate Rocketeer* is published six times a year by the Monroe Astronautical Rocket Society as a service to its members and NAR members in Western and Central New York. Subscriptions are $2.50/year. The *Upstate Rocketeer* is edited by Dan Wolf. Send all comments, complaints, letters, plans, subscriptions, etc. to him at the following address: *Upstate Rocketeer*
c/o Dan Wolf
235 Kislingbury St.
Rochester, NY 14613

MARS Membership - August 1990

Dan Wolf - President
Jeff Ryan - Vice President
Ferenc Roka - Secretary/Treasurer
Roy Metz - Senior Advisor

Mike O'Brien	Mark Doty
Rob Landis	Jay King
William Springer	Mary Wolf

Blowin' In the Wind

Greetings everybody. Welcome to another issue of *The Upstate Rocketeer*. Well here it is the middle of our best flying weather. Hope you have been able to take advantage of it and fly some models. If the last couple of years are any indication, the weather is much better for flying from July through October than in April, May and June. That's why there are several contests scheduled in the Upstate New York area for the fall months this year as compared to previous years. ASTRE has a regional and MARS has an open meet scheduled for September and the newly formed Syracuse section also has a contest planned. The grand finale may well be the high power launch in Danville on October 28th and 29th. With the Danville launch coming up, I first thought this might be a high power issue but then with the sudden interest and scheduling of NAR competitions in the area, the theme is more competition oriented this time around.

The new NAR section in Syracuse is called the SRB's of Central NY, which stands for the "Spacemodeling and Rocketry Buffs". This section was started by John DeMar of Syracuse. Anyone who has been to a MARS sport launch or contest in the past several months knows John as he has become a "regular" at our launches. John reports that there were 14 people who showed up for the "kickoff" meeting. Included in that group were David Pringle and son, also regulars at our launches and MARS members. We will miss the Pringles as club members, their dedication and support over the last year and a half has been appreciated but we are also glad they now have a club closer to home. This doesn't mean we have seen the last of them (or John) either. The close proximity of the two clubs means lots of opportunities for intersectional get togethers, competitions, etc. Now if Merrell Lane and the rest of the NAR members in the Buffalo area get organized, one of things I had hoped to see would finally happen. That is, a NAR section in each of the 4 major Upstate New York cities (Albany, Syracuse, Rochester, Buffalo).

By the way, John was able to get such a good initial turnout at the meeting by placing several flyers about the meeting, the hobby, and the club in hobby stores throughout the Syracuse area. I think John said that he printed and distributed over 400 flyers, most of which were picked up by hobby store customers. That's about a 40:1 ratio of flyers to potential club members. In comparison, I have been less successful working with NAR mailing lists the past couple of years. Of the 20-30 NAR members in the Rochester area that appear on the list each year, very few respond to direct mailings from MARS in the form of letters and this newsletter. I believe it is now time to try John's technique. Anyone who wants to help prepare and distribute flyers to Rochester area hobby stores, please let me know. I would like to try this before the September meeting. MARS members, let me know what you think and if you would like to help.

Our feature column this issue is an article on building an inexpensive and easily transportable tower written by Mike O'Brien. Anyone out there who has been wanting to buy or build a tower but the finances wouldn't allow it should check this one out. We also have a plan for a 1/2A - A engine rocket/glider just in time for the upcoming contest. Also on the competition side is a write up of the MARS June open meet "The Killer Bees Move North".

In closing, I'd like to mention that we will be losing Rob Landis as a MARS member in the near future. Rob and his wife Tracey are moving to Ann Arbor, Michigan where Rob will be doing graduate work in astronomy at the University of Michigan. Rob has been a very supportive and active member of MARS, always willing to pitch in and help out wherever needed in whatever way he could. Rob was also our club astronomy and Russian Space Program "expert". Rob will be missed but we wish him luck in his studies at U of M and as a member of HUVARS. At the same time, we welcome new club member Mark Doty, from Kendall, NY who joined MARS in July.

Until Next Time,
Dan
Dan

IF NECESSITY IS THE MOTHER OF INVENTION;
THEN BEING CHEAP IS THE FATHER OF INGENUITY.
- OR -
HOW I BUILT A TOWER LAUNCHER WITHOUT A HOME EQUITY LOAN !
by: Mike O'Brien NAR #28089 MARS section #136

Although a generous, kind and loving person by nature; for some unexplained reason, when it comes to my favorite hobby, I'm always trying to see how much I can get for how little. So when I decided that I wanted to build a tower launcher, I naturally looked for the least expensive method. Not being inclined to do anything by mail-order, I scanned back issues of AmSpac for pictures of other people's towers. After mulling it over for a while, I settled on the device discussed here. I have flown it in competition and sport launches with great success and although it perhaps takes a little more time to set up than other types, it is very portable and most importantly, CHEAP !!!.

The following parts list is everything I used to build my tower except for the old camera tripod on which it is mounted. Used tripods can be found at some camera stores or garage sales. If you are so inclined, you can of course build your own base unit. The method of attaching the tower to the base is, unfortunately, unique to each tripod so I can't provide you with instructions for that, except to say that the stronger the mounting the better. I used a 3/8" carriage bolt on mine and have had no problems with it. The thing to remember is to counter sink the mounting hardware into the tower platform so it doesn't interfere with the tower's functioning.

Parts List for 3-upright fully adjustable tower:

Item	Qty.
1. 3 foot length of 3/4" PVC pipe	3
2. End cap for 3/4" PVC pipe	3
3. 3/4 or 1" thick particle board - 14" square	1
4. 1/4-20 bolts - 3" long	3
5. 1/4-20 wing nuts	3
6. Washers for 1/4" bolt	6
7. 1/2" x 1" pine, approximately 5" long	3
8. #8, #10, or 1/4-20 threaded rod, 6" to 8" long	3
9. Wing nuts for threaded rod	6
10. 8" to 10" wooden embroidery hoop	1
11. Wood screws - 1" long	3

The basic ingredient of the tower is the uprights themselves, which are 3 foot lengths of 3/4" PVC pipe. Usually this is sold in 9 or 10 foot lengths, so unless you have a pickup, van or large wagon, you'll need to get the store to cut it for you which many will do at no charge. The threaded rod may be harder to find as you'll probably have to go to a REAL hardware store and not a "Home Improvement Center" type. There may be a charge to get the rod cut but it should be small and you might be able to get them to de-burr the ends for you, although if you buy some extra nuts, turning them on and off the rod ends several times should do the trick.

I know what you're thinking now. AN EMBROIDERY HOOP !!! He expects me to build a high tech tower launcher with AN EMBROIDERY HOOP !!! Yes I do. My motto is keep it simple and using an embroidery hoop is no stranger than using carpet thread for shroud lines, kid's clay for nose weight or treated toilet paper for recovery wadding. Spacemodelers have always been good at inventing uses for ordinary items and this is no exception.

ASSEMBLING THE TOWER BASE: The first step is to mount the end caps to the 1/2"x 1" pine "arms" as shown using the wood screws, and then cut off the corners of these arms as close to the end caps as possible. NOTE: make sure the caps are centered side to side on the arms.(PLEASE NOTE: All drawings are plan view unless noted.)

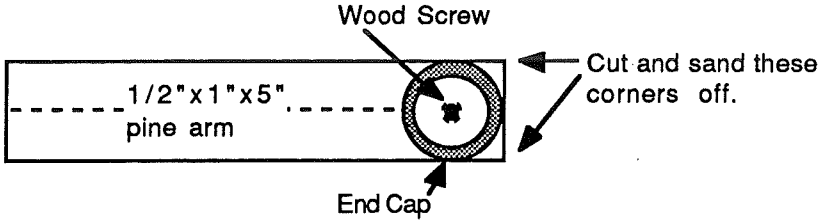

Then find the center of the 14" square of particle board by drawing lines between the diagonally opposite corners. Using a protractor, draw 3 radii from this center at 120° apart. These mark the locations of the arms.

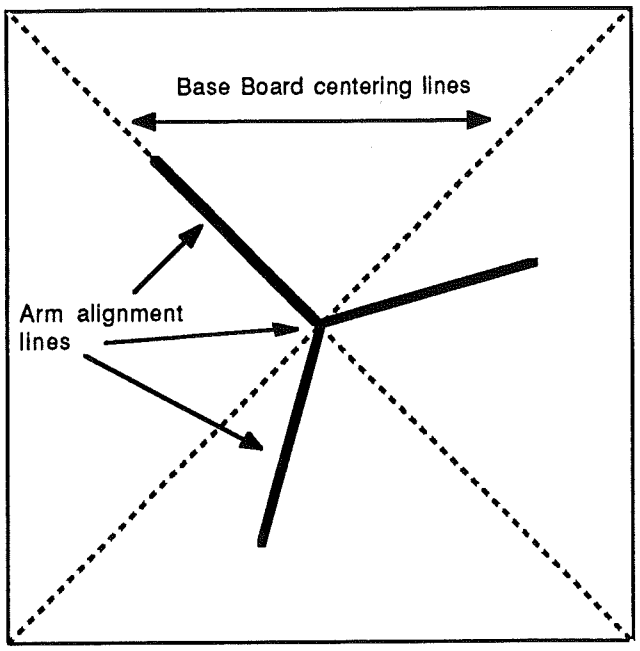

Now place the arms on the board with the end caps toward center and aligned on the 3 radii. Make sure that the end caps are close enough to each other so that you CANNOT fit a 13mm tube between them. If this is not the case, you will have to trim the ends of the arms back farther until this can be accomplished. Once this spacing has been achieved, you can mount the arms to the board with the 3" bolts.

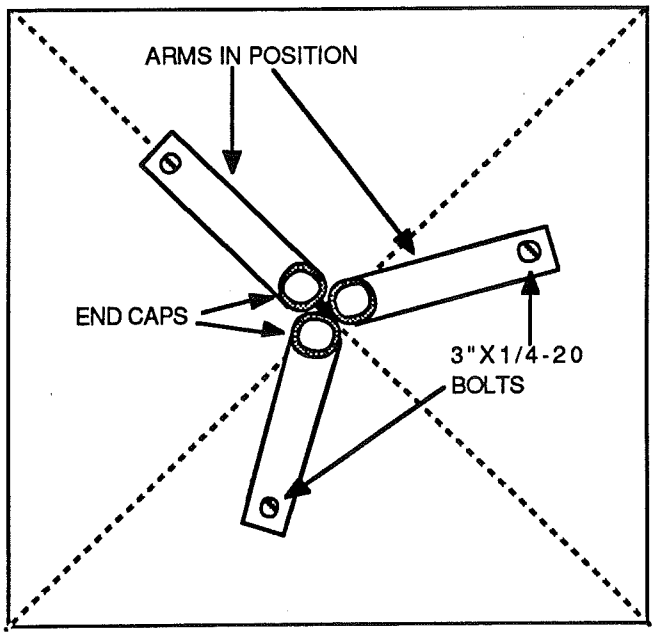

I would suggest locating, drilling and mounting one arm at a time so that the relationship of all three arms to each other can be kept constant. This is the

most critical part of the assembly. If the arms are not mounted carefully, you may not be able to close the tower enough to get reliable launches with 13mm tubes. As a safety factor you can drill holes for the mounting bolts that are a little larger than necessary. This will allow a little adjustment in the upright positioning so that a proper slip fit of the launch vehicle may be obtained.

ASSEMBLING THE HOOP: So much for the tower base. The top of the tower is where the embroidery hoop comes into play. Take each upright and drill a hole into it about 2" from one end that is just large enough to clear the threaded rod you are using. Don't drill through the pipe and out the other side, just through one wall into the center opening. This now becomes the "top" of the upright. Take the hoop and tighten the clamping screw to secure the inner and outer parts together. Don't use too much force as these hoops are somewhat fragile. You must now layout three marks on the outer edge of the hoop at 120° apart, as you did on the base board. In fact you could use those same lines as long as you are careful to center the hoop on the base board center. Using the same drill with which you drilled the holes in the uprights, **very carefully** drill holes in the hoop at the three marks. It is best if the hoop is supported close to the drill site to minimize stress on the wood.

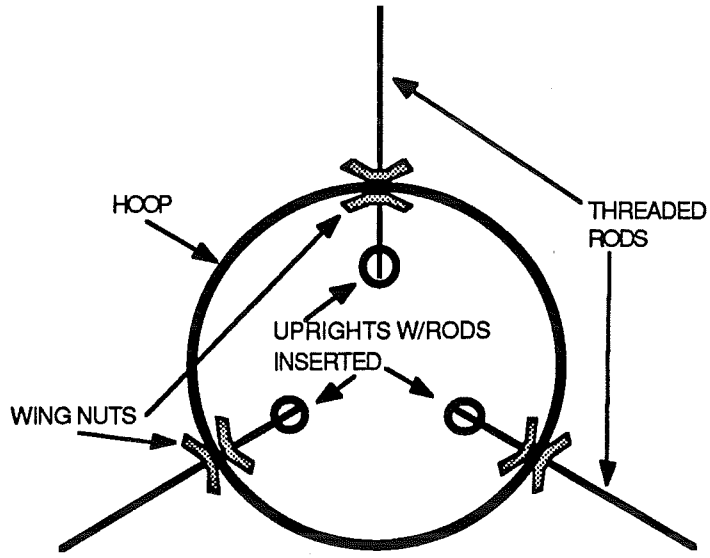

ASSEMBLING THE TOWER FOR LAUNCHING: Except for attachment to your stand or tripod, you are now done with construction of the tower. To use it, place the uprights firmly into the end-caps with the holes at the top and facing out, aligned with the arms. Loosen the mounting bolts and take the model you wish to fly or a tube of the same diameter and place it between the uprights near the base board. Position the uprights for a slip fit of the tube and so they

fit between the fins. Take the hoop, insert one threaded rod through each hole and spin one wing nut onto each rod on both sides of the hoop. Place this assembly at the top of the tower so that each rod enters the hole in one of the uprights. Bring the model or tube up to the top of the tower and adjust the uprights by moving the rods in or out as required. Tightening the wing nuts will keep the rods in place and thus the uprights. Clearance through the whole length of the tower should be checked before launching and the rods adjusted accordingly.

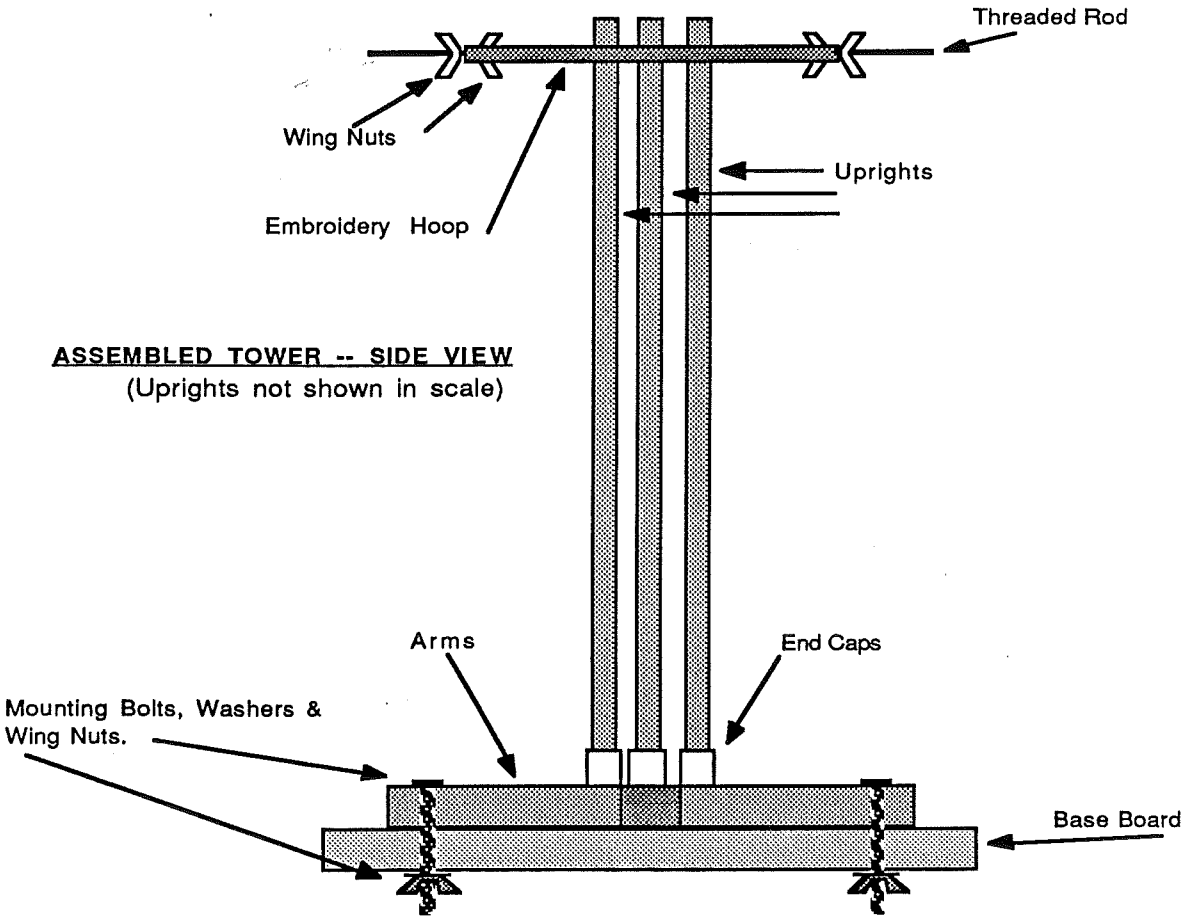

HINTS:

1.For use with larger tubed models, loosen the mounting bolts and pivot each arm out from center until the desired spacing is achieved.

2.Once you have the hoop and rods assembled -- leave them that way.

3.Don't store the tower assembled. Take the hoop and rod assembly off and pull the uprights out of the end caps. The plastic will be under less stress that way and is less likely to take a "set".

4.For large birds, I would recommend larger diameter pipe and a five foot length. This may, however, force you to use some other form of hoop for the top bracing(due to large fins) which might defeat the "cheap" aspect of this design.

THE KILLER BEES MOVE NORTH CONTEST REPORT

MARS hosted its first Open Meet in several years as NAR members from as far away as Albany, NY traveled to the MARS flying field for a chance to gain "last minute" points for the 1989-90 contest year. The contest was actually flown on its "rain-date". Originally scheduled for Sunday, June 24th, it had to be postponed due to windy and wet weather. Although the forecast for the "rain-date", Saturday June 30th, was not much better, it actually turned out to be a much better day with light winds and partly cloudy weather. The rescheduling did take its toll on the attendance however as some of the MARS faithful had to work that day. This also prevented Dan Wolf from flying as there were not enough members to man the range and free Dan up for flying. Overall, the turnout was fair with 8 contestants flying including 3 from MARS, 4 from ASTRE and one independent.

Random Duration was flown first as usual with not too much spectacular to report. The father and son combination of David A and David J Pringle took first in A and C Divisions respectively although both had an error over 25%. It seems that luck is still winning this relatively new event as thermals took more than one contestant out this time. A case in point was Mike O'Brien's 1/2A powered and parachute recovered model. A thermal took the low altitude bird on a 1:40 flight, way past the 45 second target.

B Streamer proved to be a difficult event for the contestants as only John DeMar was able to get two qualified flights off. John also had the only 2 minute plus flight, the benchmark for a "good" B Streamer flight. This easily gave John first in C Division. The next best flight was by A divisioner Marshall Gottung with a good A divisioner time of 1:52. The rest of the flights were not too spectacular with most being in the one minute area. Separations were also a problem in C division. Most models were standard fare with tracing paper or Micafilm streamers. Some used Apogee components while others were NCR kits.

B B/G saw a wide variety of designs take to the air in contrast to B SD. Jeff Vincent flew a nicely trimmed Dactyl style model to first in C Division with a two flight total of 3:24. Close behind at 3:14 was John DeMar flying a nice looking Zephyr (gee, someone actual built a rocket from the plans in this newsletter!). Third was the SRB team of Greg Gottung and Pat Perella from ASTRE flying a Manta. Fourth was Mike O'Brien who had his first model shred but flew his backup to qualify with a 47 second flight. In A division, David A Pringle took first with a converted hand launch glider kit. Although a little heavy for B B/G, it boosted well and glided well too.

B Helicopter was divided between some very nice flights and some non rotating or poorly rotating flights with little in between. In A division, Mickey took first with the best flight of the day, a very nice 1:25 with a Rose-A-Roc style model. The Straight Shooters took second flying a Tasmanian Devil. It turned in a 5 second flight that barely qualified. In C, David J. Pringle took first with two nice flights of his non kit Rotaroc style model. This model was interesting to watch as on both flights it would start out rotating very slowly and then after a few second the rotation would speed up with the model finally spinning quite fast. Jeff Vincent took second. On Jeff's first flight the model did not rotate well or rather, very slowly, decreasing his time. John DeMar took third with a home brew Rotaroc style model that featured plastic fins.

B Eggloft Duration proved to be a challenge again as 3 of the 10 flights were DQed for being unsafe and/or broken eggs. The best time of the day was turned in by Jeff Vincent flying a "2 minute egg" style model to a nice 1:17 flight. Second in C was John DeMar with a 33 second flight. Although John's model boosted well, the small chute as compared to Jeff's hurt his time. After DQing on the first flight, the SRB team took third in C with another nail biter and a 9 second duration. In A, after pranging his first flight on the asphalt, Mickey came back to take first with his "2 minute egg" type bird with a 25 second flight. David A. Pringle settled for second with an 11 second flight using an Estes "Eggspress".

Sport Scale saw an interesting assortment of entries for first time judge Rob Landis to ponder. In A division, both entries were the Estes Jupiter C kit. Only 5 points separated them after static judging but the Straight Shooters model broke its shock cord and although the recovery was safe, the flight points suffered while Mickey's model turned in a "nominal" flight. In C, Jeff Vincent's nice looking scratch built Sandhawk took first with a perfect score. Second was John DeMar's Estes Saturn V kit. John put a lot of work on this model that was not spelled out in the kit to make it more authentic. It was a nice looking

model, in fact Jeff Vincent remarked that it "is the best version of the Saturn V I've seen from the Estes kit." The model turned in an awesome flight on an Aerotech E15 motor. The liftoff was spectacular with lots of flame and smoke from motor. The delay was perfect as the ejection occurred as the model had just hit apogee. The cloth chutes slowly unfurled and the model descended gently into the soft grass for a perfect landing. There's nothing quite like a perfect Saturn V flight. Mike O'Brien flew a nice looking scratch built WAC Corporal to 3rd place. In retrospect, all the entries in C division Sport Scale were good, better than at most meets.

Overall, Mickey took first in A division with David A Pringle second, and the Straight Shooters were third. In C, Jeff was the overall winner. John DeMar with some very strong flying came in second at only his second NAR contest. David J. Pringle took third, the SRB team 4th, and Mike O'Brien 5th. Detailed results and point totals follow this write-up.

All in all it was a good day of flying and a fun contest. The weather cooperated and the flying field proved to be big enough for the events, a concern when the meet was being planned. The only improvement would have been a larger turnout. If you missed it, how about attending the next contest, coming up on September 29th.

THE KILLER BEES MOVE NORTH
OPEN MEET
RESULTS

	Random Duration	1st Flight	2nd Flight	Total Score	Points
	A Division				
1	David A Pringle	33.2		26.2%	100
2	Marshall Gottung	1:01.5		36.7%	60
3	Straight Shooters	23.0		48.9%	40
	C Division				
1	David J. Pringle	31.1		30.9%	100
2	Jeff Vincent	28.3		37.1%	60
3	SRB's	1:05.4		45.3%	40
4	Mike O'Brien	1:40.4		123.1%	20
	John DeMar	SEP			0

	B Streamer Dur.	1st Flight	2nd Flight	Total Score	Points
	A Division				
1	Marshall Gottung	1:52.1	-	1:52.1	80
2	David A Pringle	46.0	35.7	1:22.0	48
3	Straight Shooters	24.0	-	24.0	32
	C Division				
1	John DeMar	2:03	1:37	3:40	80
2	Jeff Vincent	1:14	SEP	1:14	48
3	David J Pringle	1:02	SEP	1:02	32
4	Mike O'Brien	SEP	1:01	1:01	16
5	SRB's	1:00	-	1:00	8

	B Boost/Glide	1st Flight	2nd Flight	Total Score	Points
	A Division				
1	David A Pringle	56.0	1:13	2:09	180
2	Marshall Gottung	41.0	41.0	1:22	108
	C Division				
1	Jeff Vincent	1:25	2:00	3:25	180
2	John DeMar	1:50	1:24	3:14	108
3	SRB's	44.0	1:03	1:47	72
4	Mike O'Brien	SHREAD	47.0	47.0	36
	David J Pringle	UNSAFE	-		0

	B Helicopter Duration	1st	2nd	Total Score	Points
	A Division				
1	Marshall Gottung	1:25	-	1:25	200
2	Straight Shooters	NO ROT	5.0	5.0	120
	C Division				
1	David J Pringle	51.0	1:05	1:56	200
2	Jeff Vincent	43.0	50.0	1:33	120
3	John DeMar	NO ROT	44.0	44.0	80

	B Eggloft Duration	1st	2nd	Total Score	Points
	A Division				
1	Marshall Gottung	UNSAFE	25.0	25.0	160
2	David A Pringle	8.0	11.0	11.0	96
	C Division				
1	Jeff Vincent	1:17		1:17	160
2	John DeMar	33.0	25.0	33.0	96
3	SRB's	BROKE EGG	9.0	9.0	64
	David J. Pringle	UNSAFE	-		0

	Sport Scale	Static	Flight	Total Score	Points
	A Division				
1	Marshall Gottung	627	200	827	200
2	Straight Shooters	622	30	652	120
	C Division				
1	Jeff Vincent	800	200	1000	200
2	John DeMar	776	200	976	120
3	Mike O'Brien	785	185	970	80
4	SRB's	691	200	891	40

Total Points

	A Division	
1	Marshall Gottung	808
2	David A Pringle	424
3	Straight Shooters	312
	C Division	
1	Jeff Vincent	768
2	John DeMar	484
3	David J. Pringle	332
4	SRB's	224
5	Michael O'Brien	152

Sections

ASTRE - 2112
MARS - 908
Independents - 484

As the ModRoc World Turns...
(news and rumors heard 'round the hobby)

Manufacturers News... There are so many things currently happening on the manufacturing front in the hobby is hard to keep up with them all. Perhaps one of the biggest news items is the announcement by *Aerotech's* parent company, *ISP*, of a line of reloadable motors from size H through M. According to notes on Compuserve's Modelnet from Chris Pearson, Matt Steele, Bob Sanford and others, the cases are made of aluminum and the part that is replaced includes the propellant, liner, nozzle, and delay section. Although the initial investment is said to be high, cost per flight is much lower than that of current motors. As an example, in the 29mm diameter, the reusable case sells for $108 and reload kits are $9.95 for 180 nsec (low H) and $15.00 for 240 nsec (middle sized H motor). Perhaps the most surprising news is that these motors are Class C shipable up to and including size I motors. *(Conventional motors can only be shipped class C up to size G. Size H and above must be shipped class B, and this can only be done via Federal Express to a select few airports around the country and is expensive.)* It is said that Aerotech worked with the DOT/BOE to get their propellant Ok'd for larger quantities than 62.5 grams to qualify as Class C. Look for these motors to be demonstrated at upcoming high power launches including Black Rock, LDRS and Danville as well as being on display at NARAM. ISP (Aerotech) is also introducing a line of Class B kits for use with these motors. In other Aerotech news, in their scale line, the Arcas and Tomahawk kits have been shipped to distributors while the Astrobee is not available as of yet. Lastly from Apogee/Aerotech (these guys have been busy), at NARAM they introduced a 13mm B7 motor and an 18mm C10 motor, both selling for $7.95. Also at NARAM, MRC announced that their D engines should be available by next spring.

In other motor news, rumors are that *MRC* may introduce a 1/4A engine based on their FX technology. Other news "heard" on Modelnet recently include *FSI's* discontinuation of their F7 motors as well as rumors that they may reintroduce the Thunderbolt or some other type of composite motors. Also from NARAM, Estes will introduce some "new" old kits in September.

The much awaited *North Coast Rocketry* catalog is due out soon with mailing of the 1990 edition to take place the week after NARAM. Several new items are scheduled to appear including a low cost altimeter for $99.95, an RC R/G kit, a piston launcher as well as some new large sport models.

Scale Modeling News...*HUVARS(Huron Valley Rocket Society)* is now taking orders for the book "Scale Model Rocketry: A guide for the Historian-Craftsman." The work of HUVARS member Peter Alway, this is a 160 page, professionally printed, spiral bound book filled with over 70 photos (12 of them 8x10's), 40+ scale subjects, dimensional data, 3 full scale plans for beginners as well as scale tips and hints. To place your order send $19.95 to Huron Valley Rocket Society, 2742 Beacon Hill, Ann Arbor, MI 48104. Make checks payable to Peter Alway. Books will be shipped in September or early October. The first 50 advance orders get a bonus full color photocopy of the first V-2 launched at White Sands.

NAR News *(FAA proposal)*...Things may be starting to happen to the 5 year old NAR proposal to the FAA to raise the weight limits for model rockets in its FAR part 101 from 1 lb. to 3.3 lbs. and propellent limit per model to 125 grams to match the NAR limits. For the first time, the FAA has agreed to put the proposal on the official NPRM schedule. At the July Modelnet Conference NAR President Pat Miller said that "this is the most promising news we've had in four years." Also in NAR News, here are the unofficial results from last weeks NARAM (National Association of Rocketry Annual Meet).

A Division Champion	**Marshall Gottung**
Reserve	**Chris Weaver**
B Division Champion	**Matt Sias**
Reserve	**Tim Barklage**
C Division Champion	**Ken Weaver**
Reserve	**Jeff Vincent**
Teams Div. Champion	**Southern Comfort**
Reserve	**East Meets West**
Section Champion	**Rocket City Aces**
Reserve	**ASTRE**

Tripoli News... Things at Tripoli continue to improve. Two issues of the Tripoli Report have now been sent and are a welcome site to the membership. In addition, headquarters is now functioning much better with renewal notices and renewal cards both going out on a regular basis. Average turn around on a renewal is said to run less than 10 days. Also, the Tripoli engine testing program is now underway using Aerotech's facilities but a large donation recently received by Tripoli will allow Tripoli to establish its own test stand/facility.

TEST FLIGHT OF 114 SEC. WAS MADE IN COLD (30°) WEATHER WITH 1/2A3-2T

PREP BIRD WITH NORMAL BURN-STRING ACTUATOR.

STATUS - 4

1/2A , A R/G by TOM BEACH

Note: This plan first appeared in the March '79 issue of "View From ZENITH," the former ZENITH Section (#137) Newsletter.

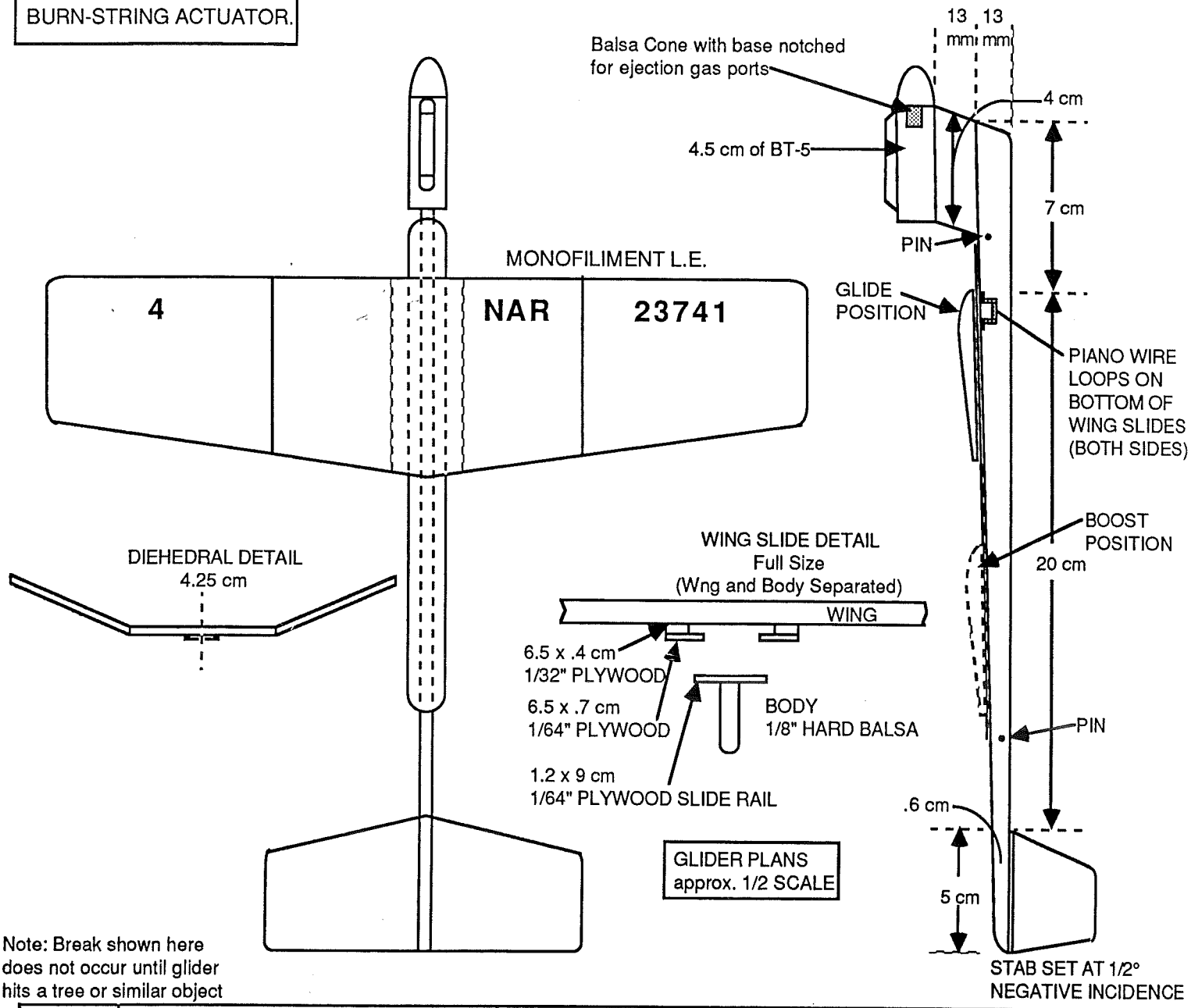

Note: Break shown here does not occur until glider hits a tree or similar object

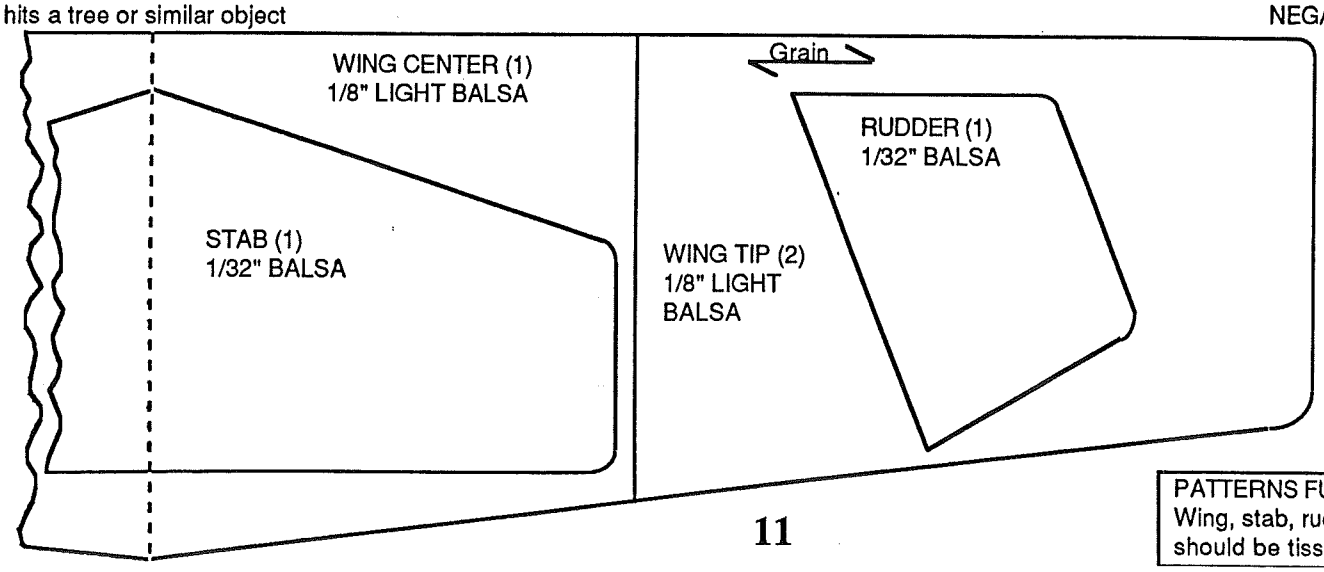

PATTERNS FULL SIZE
Wing, stab, rudder and Body all should be tissue covered

PHOTO PAGE 1
SPORT SCALE AT KILLER BEES MOVE NORTH

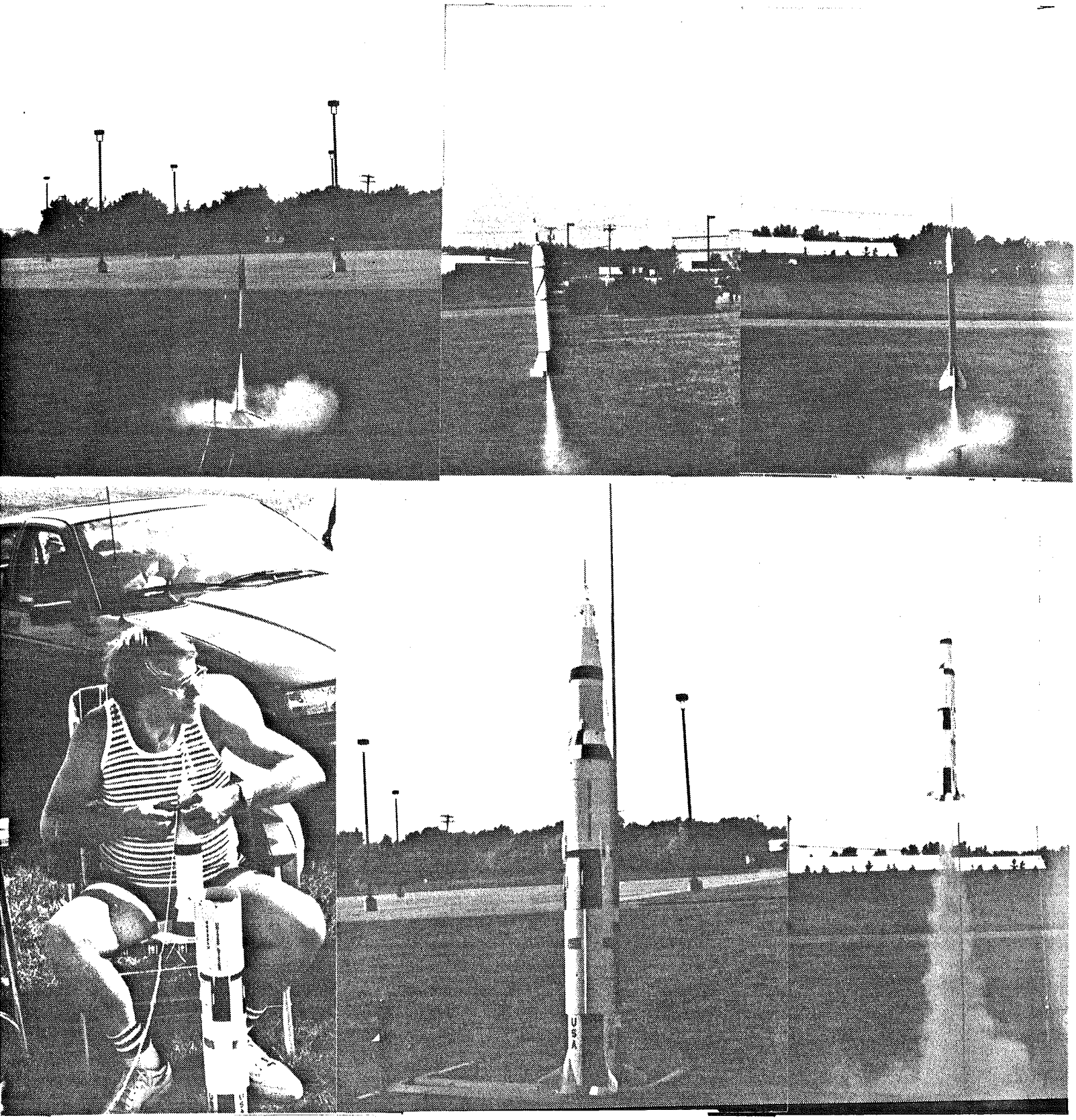

Top left-Mike O'Brien's nicely done scratch built WAC Corporal.
Top middle-Mickey Gottung's Estes Jupiter C.
Top right-Jeff Vincent's winning scratch built Sandhawk.
Bottom left-John DeMar preps his EstesSaturn V for flight.
Bottom middle-John's Saturn ready for liftoff.
Bottom right-The Saturn V at liftoff on an E15 motor. The Saturn turned in a spectacular lfight.

PHOTO PAGE 2
MARS SPORT LAUNCH, JULY 22, 1990

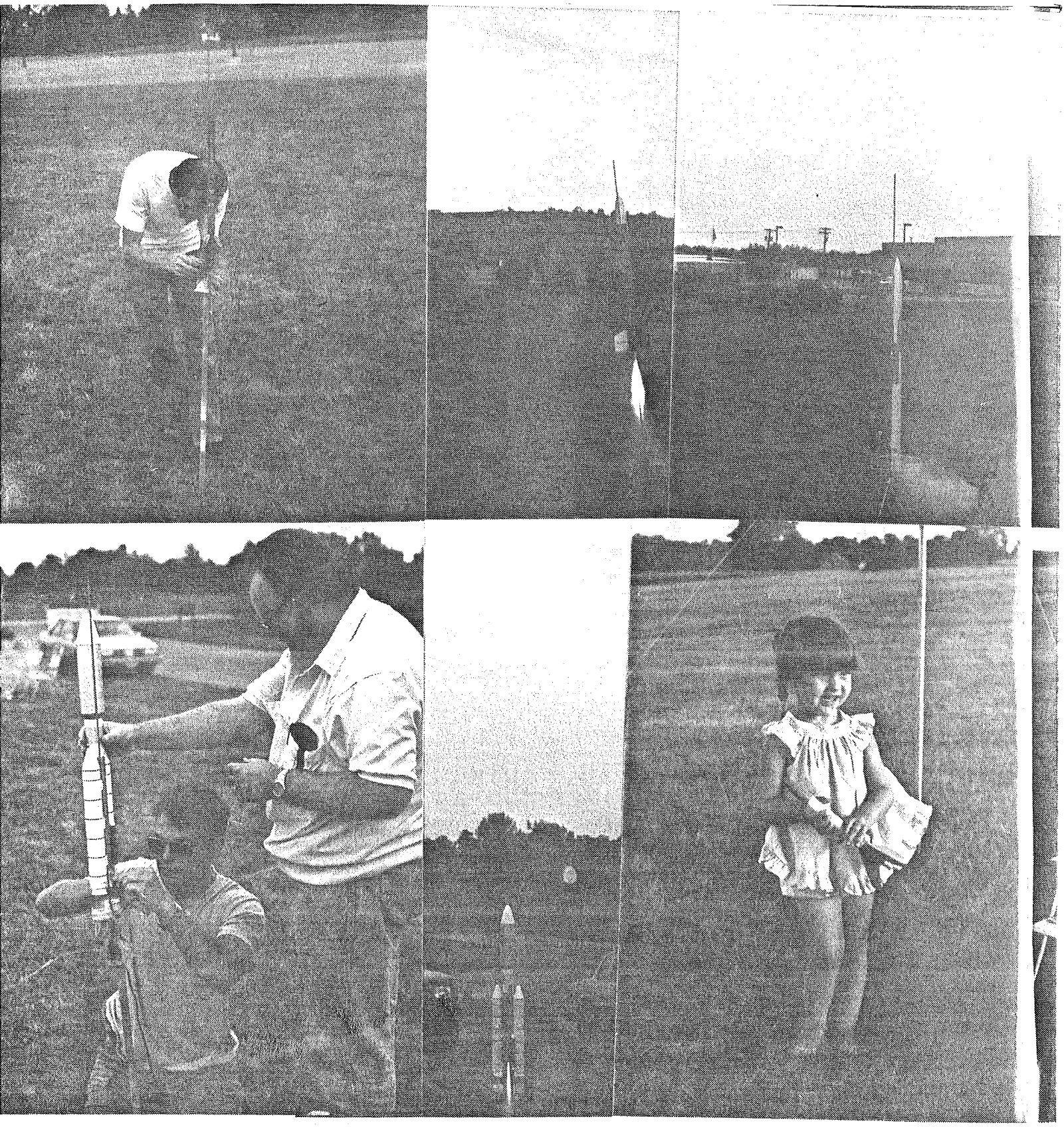

Top left-Ferenc Roka prepares to launch his FSI Viking with an Aerotech E25.
Top middle-Dave Pringle's rebuilt NCR Aerobee-Hi takes off under the power of an Aerotech White Lightning motor. Dave rebuilt it after it was recovered from a tree at Videk last fall.
Top right-Another of Dave Pringle's growing high power fleet, this home brew bird flew on a D12 and 3 Cs.
Bottom left-Mike O'Brien gives a steadying hand to Rob Landis' Titan IIIE model as Rob prepares to launch it on its maiden flight. Bottom middle-The Titan at ignition.
Bottom right-Mary Wolf shortly after returning from another successful launch of her Alpha III.

PHOTO PAGE 3 - MORE SPORT LAUNCH

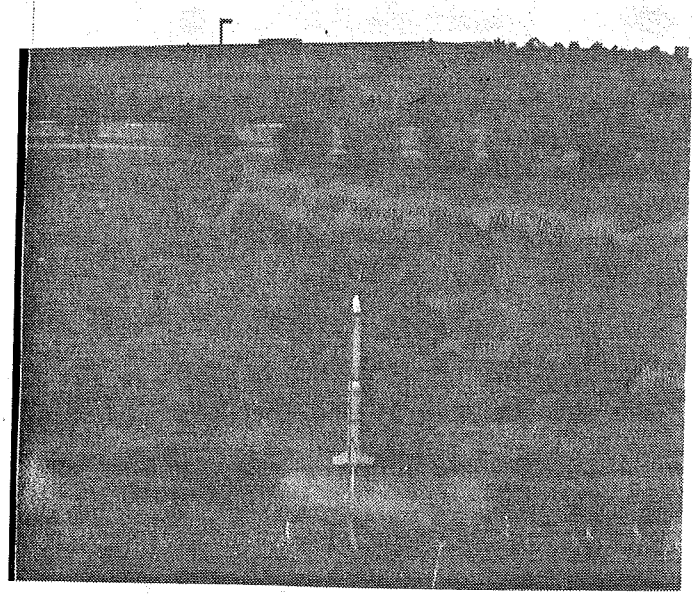

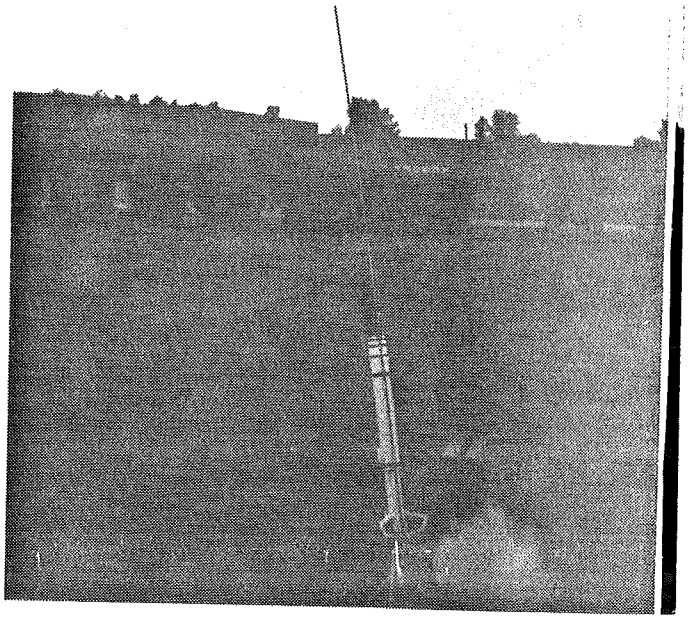

MONROE ASTRONAUTICAL ROCKET SOCIETY MEMBERSHIP APPLICATION

Come join the fun. As a member of the Monroe Astronautical Rocket Society you will have the opportunity to participate in many fun filled club activities including NAR competition at MARS hosted contests as well as club trips to other contests, club meetings, club sport launches, as well as meeting other rocketeers who share your interests. Enjoy model rocketry to its fullest, join MARS today. Membership dues are $10.00 for Senior members (21 and over) and $5.00 for Leader and Junior (under 21) members.

PLEASE FILL IN ALL INFORMATION BELOW

NAME:_____ DATE OF BIRTH_____ NAR #_____

ADDRESS:_____

CITY:_____ STATE_____ ZIP _____

Make checks/money orders payable to MARS, c/o Ferenc Roka

Please return to: Dan Wolf
235 Kislingbury St.
Rochester, NY 14613

July Sport Launch

The last couple of months have been a busy time for MARS. In June we held our "Killer Bees Move North" Open Meet (report elsewhere in this issue), and in July our "Space Week" Sport Launch. Rob Landis, Roy Metz, Mike O'Brien, Jeff Ryan, Ferenc Roka, Mary Wolf and Dan Wolf were all in attendance from MARS while the Pringles and DeMars came over from the newly formed SRB's Section. The weather for the most part cooperated although rain later in the afternoon cut things short a bit.

Rob finally flew his Estes Titan III kit and it turned in a very nice flight on its D12-3 engine. Roy flew a unique group of models as usual including the old Estes "Birdie" kit as an MRC Moonraker. Jeff Ryan brought out an Aerotech Initiator kit with a black paint job under the kit decals. The model flew very well on it maiden flight powered by an Aerotech F41 but Jeff had to walk a ways to retrieve it as it landed on the other side of the Rochester Lumber building. Ferenc brought out his Estes Russian Scud kit for a nice flight. Ferenc also flew one of the FSI Viking series models (Viking II) with the an Aerotech 18mm E25. This flight was incredible as at liftoff the model seemed to leap off the pad and at apogee it was nearly out of sight. Dan test flew his E helicopter model for WUBBA-13 with a D12-3. It worked although it rotated upside down. Dan also flew his Initiator. Dan flew his with an FSI F100 for a much lower altitude flight than Jeff's but the walk was much shorter. Dan also flew his AAA Pennsylvania Crude on an FSI E60 as well as his US Rockets Banshee ("Buffalo Bill") with an FSI F100. Surprising to some, all 3 FSI motors worked perfectly. The SRB's guys brought along some fun stuff. David J. Pringle flew several large models including his NCR Aerobee-Hi and an HPR bird of his own design built from BT-80 tubing and using balsa fins. Although large, it was very light. Loaded up with a D12 and 3 C6 engines, this model flew quite high but landed in the trees on the west side of the building. The next day the shock cord broke and Dan recovered the model but the nose cone and parachute are still there! Dave also flew an NCR kit with 3 D12 motors all ignited from the same flashbulb. John DeMar flew his Mini Katana loaded up with seven engines for a very impressive flight.

Shortly after 4:00, the rain came, ending the flying for the day. As the group left, all agreed that it was another successful sport launch. Photos of the launch can be found elsewhere in the newsletter.

Fall Contest Planned

At the last club meeting, a possible fall contest was discussed. In July, conversations with the ASTRE and SRB's sections indicated that there would possibly be enough interest to warrant MARS hosting a regional this fall. Then, last week, further communication revealed that ASTRE's commitment was uncertain and also that they would be holding their own regional on September 15-16. After some phone calls between MARS club members, the final result was that MARS will host an Open meet on September 29th (raindate Sept. 30th). This would allow a weekend "breather" in between the ASTRE regional and the MARS open. See the listing in the "Events Calendar". Originally the idea was to plan this meet at the July Sport Launch but when the rains came, everyone left quickly. Thus the need for the telephone conversation route. Anyway, for those who were wondering, that is how the contest came about. For those interested, we can discuss the contest at the August Sport Launch.

Danville 1990 II Trip

Danville 1990 II, a Tripoli sanctioned high power rocket launch, will be held on October 27th & 28th near Danville, Illinois. Although this is not a model rocketry event, many MARS members have expressed interest in attending this launch. If you are interested in sport rocketry beyond the current NAR limits, this launch is for you as it is the only launch of its type within a days drive of Rochester. This is an opportunity for Tripoli members to be "confirmed" as Class B consumers (allowing purchase of size H motors and above), a good place for confirmed members to purchase class B motors and finally, a good place for anyone interested to observe and witness this high power "stuff" and Tripoli first hand. We will try to get as many people as we can to fill up a car or cars so as to keep gasoline, tolls and other costs to a minimum as well as having enough people to share the driving. At present we have room for up to 4 people in one car. If more people are interested, we can plan on additional cars. Departure time from and return time to Rochester have not been set as of yet as we will try to plan it around the work schedules of those interested as much as possible. We can hopefully work out the details or at least come up with a preliminary plan at the September MARS meeting.

Events Calendar

Model Rocketry related events in the Upstate New York or of interest to rocketeers of this area are listed below. If you have an upcoming model rocket event planned, send info to the editor.

August 19th, 2:00 PM MARS Sport Launch.
Location: Videk, Farmington, NY. 1/4 mile south of New York Thruway Exit 44 at corner of Rt. 332 and Collet Road. Contact: Dan Wolf 458-3848.

September 15-16 BART '90 Regional Meet.
Location: Amsterdam, New York
Events: A Payload, B Eggloft Duration, A Boost/Glide Duration (MR), 1/2A Helicopter Duration (MR), A Super-Roc Duration, Plastic Model.
Schedule: Saturday, 10:00 AM to 5:00 PM.
(A Payload, Saturday 2-4)
Sunday, 10:00 AM to 2:00 PM
Note: Plastic Model judged Saturday, Flown Sunday.
Hosted By ASTRE.
Contact: Jeff Vincent (518) 439-2055.

September 21, 7:00 PM MARS Club Meeting.
General Club Meeting. Items to be discussed include flying/meeting schedule for remainder of 1990, MARS travel plans for the October Danville High Power Launch, membership drive, as well as other topics plus general "bull session", etc.
Contact: Dan Wolf 458-3848.

September 22nd, SRB's Sport Launch.
Location: Syracuse, New York.
Contact: John DeMar (315) 451-6470

September 29th, 10:00 AM Finger Lakes Fall Classic II Open Meet (FLFC II).
Location: Videk, Farmington, NY.
Events: Open Spot Landing, Random Duration, 1/2A Super-Roc Duration, B Eggloft Duration, A Boost/Glide Duration, A Rocket/Glide Duration, A Helicopter Duration.
Hosted by MARS.
Contact: Dan Wolf (716) 458-3848.

October 13, SRB's of Central NY Local Meet.
Location: Syracuse, NY.
Events: 1/2A Parachute Duration, A Streamer Duration, 1/2A Helicopter Duration, A Boost/Glide Duration, B Eggloft Duration, B Super-Roc Duration.
Contact: John DeMar (315) 451-6470

October 27-28 Danville 1990 II High Power Launch. Tripoli Rocketry Association sanctioned advanced rocketry launch. Location: Danville, IL. See notice elsewhere in this issue for details.

UPSTATE ROCKETEER
c/o Dan Wolf
235 Kislingbury St.
Rochester, NY 14613